GHISA

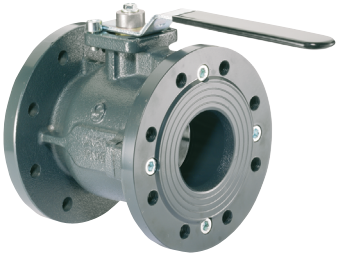

Valvola a sfera in ghisa GJS 400 - attacchi flangiati PN 16 (IVR 77)
Valvola a sfera in ghisa GJS 400 - asta e sfera inox - attacchi flangiati PN 16 (IVR 78)
Impieghi: installazioni idrotermosanitarie, acqua surriscaldata, aria compressa, acquedotti, idrocarburi (non gassosi) ed olii.

Cast iron GJS 400 ball valve - flanged ends PN 16 (IVR 77)
Cast iron GJS 400 ball valve - stainless steel stem and ball - flanged ends PN 16 (IVR 78)
Application: plumbing and heating installations, overheated water, compressed air, waterworks, hydrocarbons (non-gaseous) and oils.

Kugelhahn aus Gusseisen GJS 400 - Flanschanschlüsse PN 16 (IVR 77)
Kugelhahn aus Gusseisen GJS 400 - Stab und Kugel aus Edelstahl - Flanschanschlüsse PN 16 (IVR 78)
Einsatzbereiche: hydrothermische Sanitäranlagen, überhitztes Wasser, Drucktluft, Wasserleitungen, Kohlenwasserstoffen (nicht gassförmig) und Öle.

Vanne à boisseau sphérique en fonte GJS 400 - fixations brides PN 16 (IVR 77)
Vanne à boisseau sphérique en fonte GJS 400 - tige et sphère inox - fixations brides PN 16 (IVR 78)
Utilisations: Installations hydro-thermo sanitaires, eau surchauffée, air comprimé, aqueducs, hydrocarbures (non gazeux) et huiles.

Шаровой кран из чугуна GJS 400 - Фланцевое соединение PN 16 (IVR 77)
Шаровой кран из чугуна GJS 400 - Шток и шар из нержавеющей стали - Фланцевое соединение PN 16 (IVR 78)
Сфера применения: теплоснабжение, водоснабжение, сжатый воздух, (без газообразных) углеводородов, масла.

N	PART NAME	MATERIAL	TREATMENT	QTY
1	Corpo - *Body*	Ghisa GJS 400 - *Cast iron GJS 400*	Verniciato - *Painted*	1
2	Flangia - *Flange*	Ghisa GJS 400 - *Cast iron GJS 400*	Verniciato - *Painted*	1
3	Seggio Sfera - *Ball Seat*	PTFE		2
4	Sfera - *Ball*	Ottone - *Brass* CW617N - UNI EN 12165 *	Cromata - *Chrome Plated*	1
5	Asta - *Stem*	AVP - 9SMnPb36 *		1
6	Rondella - *Washer*	PTFE		1
7	O-Ring	HNBR		1
8	Anello Asta - *Stem Ring*	PTFE		1
9	Premistoppa - *Packing Nut*	Ottone - *Brass* CW614N - UNI EN 12164		1
10	Leva - *Handle*	Acciaio - *Steel*	Rivestito PVC - *PVC coated*	1
11	Cappuccio - *Cap*	Ottone - *Brass* CW617N - UNI EN 12165	Nichelato - *Nickel Plated*	1
12	Vite - *Screw*	Acciaio - *Steel*	Zincato - *Zinc Plated*	1
13	O-Ring	HNBR		1
14	Perno di fermo - *Stop Pin*	Acciaio - *Steel*	Zincato - *Zinc Plated*	1
15	Vite - *Screw*	Acciaio - *Steel*	Zincato - *Zinc Plated*	0/4/8/12

* AISI 304 nel modello IVR 78 / *AISI 304 in the IVR 78 model*

Estremità flangiate
UNI EN 1092

Flanged ends
UNI EN 1092

Size

DN20-DN150 16 bar

ASTA ANTISCOPPIO
ANTI BLOW-OUT STEM

Max
+150° C
Min
-10° C

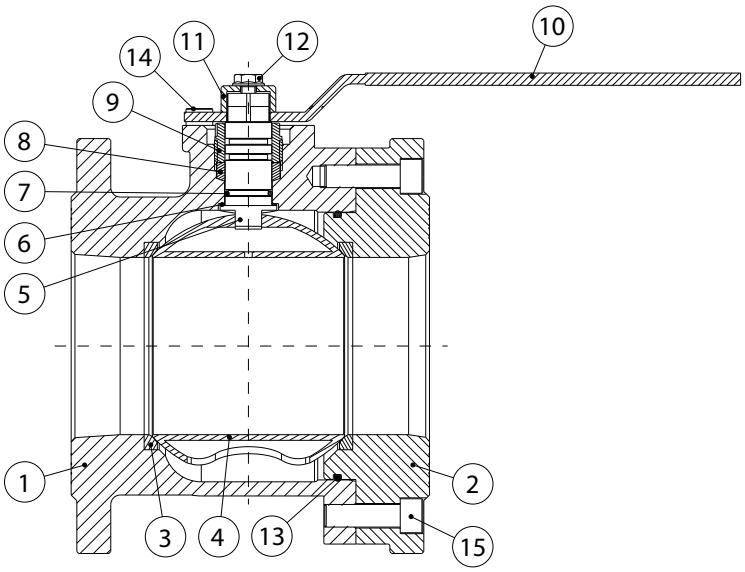

CE 0425

Energy Expert by Idroexpert
Via dell'Industria 15 - 48015 Montaletto di Cervia (RA) Tel. 0544 964311 - Fax 0544 267811
info@divisionenergy.com - www.divisionenergy.com

GHISA

DIMENSIONI - *DIMENSIONS* (mm)

	Size	Ø	S	H	L	D	a	d	Z	Z1	ISO 5211	C	A-R	B-R	C-R	D-R	h-R	H-R
0400909	DN20	20	120	73	200	105	75	4xØ14	16	16	F04	9	*	*	*	*	*	*
0400910	DN25	25	125	77	200	115	85	4xØ14	16	16	F04	9	*	*	*	*	*	*
0400911	DN32	32	130	82	200	140	100	4xØ18	16	16	F04	9	*	*	*	*	*	*
0400912	DN40	40	140	92	240	150	110	4xØ18	17	20	F05	14	127	45	52	150	175	210
0400913	DN50	50	150	99	240	165	125	4xØ18	21	18	F05	14	127	45	52	150	175	210
0400914	DN65	61	170	121	260	185	145	4xØ18	20	20	F07	17	127	45	52	150	175	210
0400915	DN80	74	180	130	260	200	160	8xØ18	23	20	F07	17	127	45	52	150	175	210
0400916	DN100	95	190	144	260	220	180	8xØ18	21	21	F07	17	127	45	52	150	175	210
0400917	DN125	120	200	185	450	250	210	8xM16	22	36	F10	22	170	63	73	288	280	315
	DN150	145	210	204	450	285	240	8xM20	22	33	F10	22	170	63	73	288	280	315

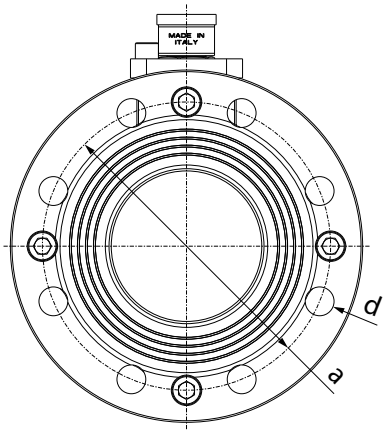

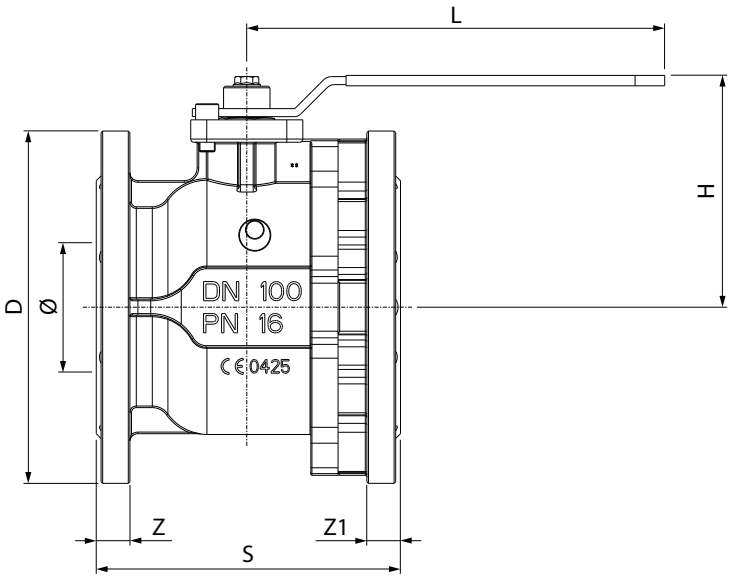

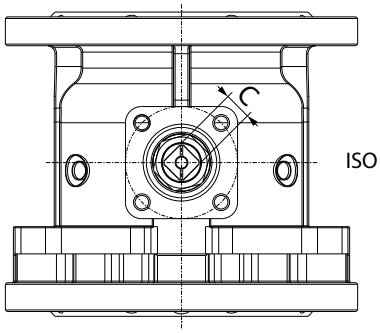

ISO 5211

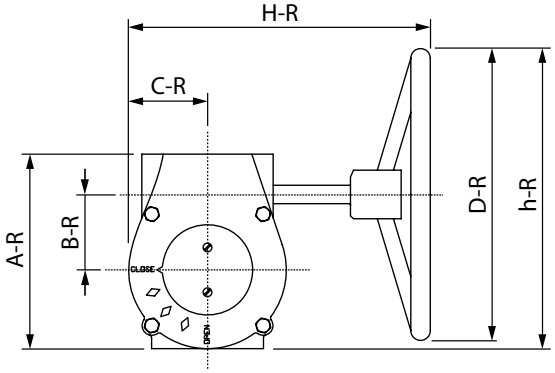

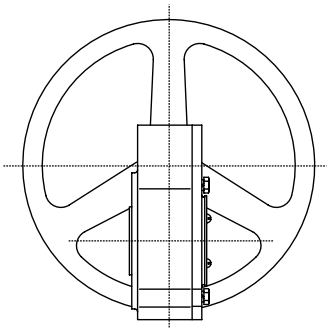

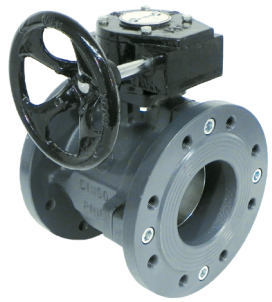

SU RICHIESTA - *ON REQUEST*

IVR 180 - Riduttore di manovra manuale
IVR 180 - Manual gearbox
IVR 180 - Manuelles Getriebe
IVR 180 - Réducteur de manoeuvre manuelle
IVR 180 - Ручной редуктор управления

Energy Expert by Idroexpert
Via dell'Industria 15 - 48015 Montaletto di Cervia (RA) Tel. 0544 964311 - Fax 0544 267811
info@divisionenergy.com - www.divisionenergy.com

PERDITE DI CARICO - *FLOW AND PRESSURE DROPS*

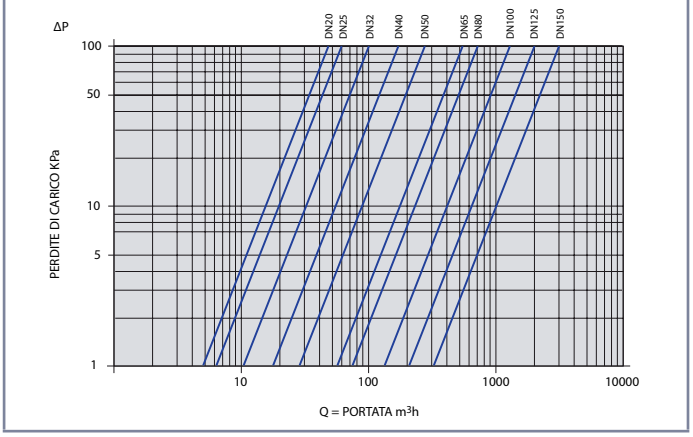

Size	KV
DN20	45
DN25	60
DN32	100
DN40	170
DN50	265
DN65	510
DN80	790
DN100	1230
DN125	1900
DN150	2900

PRESSIONE / TEMPERATURA - *PRESSURE / TEMPERATURE*

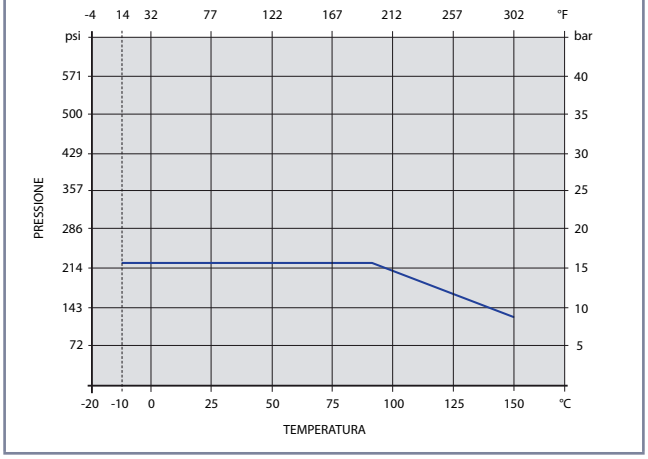

Energy Expert by Idroexpert
Via dell'Industria 15 - 48015 Montaletto di Cervia (RA) Tel. 0544 964311 - Fax 0544 267811
info@divisionenergy.com - www.divisionenergy.com